# ROYAL

## HIGH PRECISION SPINDLE

PRECISION | STABILITY | RIGIDITY | EFFICIENCY

Total Solution • State of the Art

# ABOUT ROYAL

**Quality Policy**

「Be an excelsior who seeks facts」

**Quality Standard**

「High Precision, High Stability, High Rigidity, High Efficiency」

**Business Mission**

「Be the Innovative Added Value for Machine Tools」

## Precision Spindle Brand 100% Made in Taiwan

Royal Precision Tools Corporation has specialized in high precision machine tool spindles since 2003 in Taichung, Taiwan.

Our comprehensive product range of spindles is well deployed in various machinery types as milling, turning, mill-turn, multi-spindle, tapping and grinding.

With professional competencies of R&D, designing, manufacturing, assembling and repairing, Royal has won outstanding recognition in the machine tools industry along the way.

## Quality Assurance State of the Art

To characterize Royal spindle as high precision, stability, rigidity and efficiency, being excelsior who seeks from facts has always been at the forefront of our quality policy.

Every single spindle is examined with uncompromising standards and every new spindle is designed to increase spindle performance and go beyond common expectations.

We have indeed made great efforts to ensure consistent high-quality spindles for our customers to rely on.

## Customer-Oriented Added Value

Royal, a customer-oriented company, is always projecting the most fit-in services and total solutions with custom-designed spindles and top expertise in the field.

All details and segments have to be oriented towards customers' benefits. We believe that only by fulfilling the interests of our business partners can we work together to create the highest added value for the machine tools industry.

# CORE COMPETENCIES

Standardized Environment

Parts Quality Inspection

## 30+ years Industrial Experience

Ahead of the founded year, our management team has a rich and variety of academic and practical background experience which have come with substantial technical knowledge and leadership onboard. Meanwhile, gathering R&D and production engineers, ROYAL team has been continually advancing the design techniques as well as production technology to keep up or even ahead of the rapidly changing trend in the machine world.

## µm Precision Standard High Recognition

Every single spindle is inspected thoroughly for precision standard check. With our strict quality inspection standard, our customers can trust our spindles without hesitation. ROYAL spindles have gained recognition as the expert in high precision spindle industry from our customers and the machine tool industry.

## 9,000+ m2 Headquarter & Factories

In response to customers' demand for mass production and individual spindle design, we have expanded the production area to more than 9,000 square meters, while the largest area among is the production base of motorized (built-in) spindle for 4,000 square meters. Our one-stop production line includes parts producing, parts grinding, assembly test, quality control program and after-sales repairing service.

## 2500+ Spindles Monthly Productivity

Along with our whole set of precision manufacturing equipment, ROYAL is more than capable of mass production with total quality control policy. Customers' needs are the top priority at ROYAL which leads us to keep increasing productivity and enhancing technical innovation.

Quality Assurance Program

Mechanism of Spindle Assembly

Testing of Spindle Assembly

## 9,200+ Spindles Custom-Designed

Offering both OEM and ODM service, ROYAL has our in-house engineering team for individually customized designs. We jointly create exclusive customized and high-performance spindles to realize any ideas and meet any requests.

## 10+ years Partnership with Japan

At ROYAL, our motorized (built-in) spindles has been recognized by Japan machine brands as stable quality and high-performance. With our Japanese partner, we have been having not only long-term business relationship, but also regular workshop to exchange industrial knowledge, new spindle technology and insights in the machine tools industry.

## 80% Parts Self-Made Rate

While constantly increasing the self-made parts rate, we can precisely control the lead time, production costs and parts quality at the same time. ROYAL's spindles always meet the standards of precision on account of the quality parts we produce and monitor thoroughly. Our customers will have the spindle solutions from single source.

## 19,000+ Parts Self-Made Kinds

In addition to the spindle solutions, ROYAL also offers precision parts solutions inclusive of customized specification, processing and grinding service as well as OEM and ODM service.

# ONE-STOP SOLUTION

## Spindle Customization

- In-house engineering team with custom engineered solutions
- Customized spindle specification for diverse machining request

## Production Equipment

- Complete production line with high precision rotary surface/vertical grinder, mill-turn multi-tasking machine center, internal grinder, lapping machine
- Successfully integrated the spindle production technologies and maximized productivity

## Environment Perfection

- Balanced temperature and humidity control production assembly site
- Basis of Toyota Production System (TPS) as referred to lean manufacturing
- Flawless production efficiency & consistent high-quality spindles

## Spindle Assembly

- Experienced assembly team to maintain spindle precision and reliable performance
- Regularly internal training and evaluation program for advanced technical skills
- Precisely production time on schedule by systematic manufacturing and assembly testing line

## Parts Quality Inspection

- 80% Self-Made Parts Rate to monitor quality and lead time
- All parts are examined thoroughly with high standard
- Pre-dynamic balance calibration, 3D coordinate & roundness measuring

## Quality Assurance Program

- 3D Coordinate & Roundness Measuring
- Thermal Temperature Run-In Test
- Dynamic Balance Calibration Service
- Accuracy Check and Clamping Force Test
- Vibration & Power Spectrum Inspection
- Static Axial & Radial Rigidity Test
- Dynamic Stiffness Test
- Dynamic Rotary Accuracy Test

# SPINDLE SOLUTIONS

**Speed** High

**Torque** Mid-High

## MOTORIZED

Milling / Turning / Mill-Turn / Multi-Spindle

### High Precision

- High Dynamic Rotary Accuracy
- Balancing Adjustment within G1, Low Vibration
- Modularized Easily
- Thermal Displacement, High Stability
- Short Housing Length, Low Inertia

### High Efficiency

- High Motor Power, High Moments of Inertia

**Speed** Mid-High

**Torque** Medium

## DIRECT-DRIVE

Milling / Mill-Turn / Tapping / Grinding

- High Dynamic Rotary Accuracy
- High Precision, Low Vibration
- Same Flange Dimension, High Adaptability

**Speed** Mid-Low

**Torque** Low

## BELT-DRIVE

Milling / Turning

- Complete Taper Hole, High Precision & Rigidity
- Easily Repair, Simple Maintenance

### Turning

- High Dynamic Rotary Accuracy
- High Axial & Radial Rigidity
- Stable Thermal Temperature

**Speed** Low

**Torque** High

## GEAR-DRIVE

Milling

- High Torque Transmission
- High Cutting Efficiency

【 Customized spindle specifications are available. Welcome to contact us for your spindle solutions. 】

# MILLING Motorized Spindle

| Model | Housing OD (mm) | Max. Speed (rpm) | Taper | Clamping Force (kgf) | Bearing ID (mm) | Lubrication | Motor Specification | Power S1 (kW) | Torque S1 (Nm) | Cooling | Weight (kg) | CTS |
|---|---|---|---|---|---|---|---|---|---|---|---|---|
| RE3012 | Ø120 | 30000 | BT30/BBT30 | 250±50 | Ø45+Ø35 | Grease | ATE AC90/100/4 | 7.5 | 6 | Pure Water | Approx. 30 | Optional |
| REH022 | | 30000 | HSKE40 | 900±200 | Ø45+Ø35 | Grease Oil-Air | ATE AC90/100/4 | 7.5 | 6 | Oil/Pure Water | Approx. 30 | |
| RE4121 | Ø150 | 20000 | BBT40 | 1000±100 | Ø70+Ø60 | | ATE AC120/120/4 | 15 | 12.1 | Pure Water | Approx. 82 | |
| REH063 | | 24000 | HSKA63 | 2050±250 | Ø70+Ø55 | | ATE AC120/120/4 | 15 | 12.1 | | Approx. 82 | |
| RE4122 | Ø170 | 20000 | BBT40 | 1260±60 | Ø70+Ø60 | | FANUC Bil 90L/25000 | 18.5 | 29.4 | Oil | Approx. 105 | |
| REH112 | | 24000 | HSKA63 | 2050±250 | Ø70+Ø60 | Oil-Air | FANUC Bil 90L/25000 | 18.5 | 29.4 | Oil/Pure Water | Approx. 105 | |
| REH040 | | 20000 | HSKA50 | 1300±200 | Ø60+Ø55 | Grease | FANUC Bil 100S/20000 | 11 | 14 | | Approx. 120 | |
| REH069 | | 24000 | HSKA63 | 2050±250 | Ø70+Ø55 | Grease Oil-Air | FANUC Bil 90L/25000 | 18.5 | 29.4 | Oil | Approx. 135 | |
| RE4064 | Ø210 | 20000 | BBT40 | 1260±60 | Ø70+Ø55 | Grease | SIEMENS 1FE 1083-4WN11 | 24.8 | 63 | Pure Water | Approx. 160 | |
| REH020 | | 20000 | HSKA63 | 2050±250 | Ø70+Ø55 | Grease Oil-Air | SIEMENS 1FE 1083-4WN11 | 24.8 | 63 | | Approx. 160 | |
| RE4114 | Ø230 | 20000 | BBT40 | 1260±60 | Ø70+Ø60 | Oil-Air | FANUC αB112L/20000i(220V) | High Winding 18.5 / Low Winding 11.3 | High Winding 27.2/ Low Winding 86.8 | Oil | Approx. 230 | |
| | | 20000 | BBT40 | 1260±60 | Ø70+Ø60 | | ATE AC180/260/4(380V) | 26 | 123.5 | | Approx. 230 | |
| REH099 | | 20000 | HSKA63 | 2050±250 | Ø70+Ø60 | | FANUC αB112L/20000i(220V) | High Winding 18.5 / Low Winding 11.3 | High Winding 27.2/ Low Winding 86.8 | | Approx. 230 | |
| | | 20000 | HSKA63 | 2050±250 | Ø70+Ø60 | | ATE AC180/260/4(380V) | 26 | 123.5 | | Approx. 230 | |
| RE5007 | Ø250 | 10000 | BBT50 | 1900±100 | Ø100+Ø70 | Grease Oil-Air | FANUC Bil132L/14000 | High Winding 22 / Low Winding 15 | High Winding 41.6/ Low Winding 159 | | Approx. 270 | |
| RE5025 | Ø310 | 12000 | BBT50 | 2400±100 | Ø100+Ø70 | Oil-Air | FANUC aB160LL/13000i | High Winding 26 / Low Winding 18.5 | High Winding 99.3/ Low Winding 305 | | Approx. 410 | |
| REH104 | | 10000 | HSKA100 | 5150±650 | Ø100+Ø70 | | FANUC aB160LL/13000i | High Winding 26 / Low Winding 18.5 | High Winding 99.3/ Low Winding 305 | | Approx. 410 | |

## RE3012

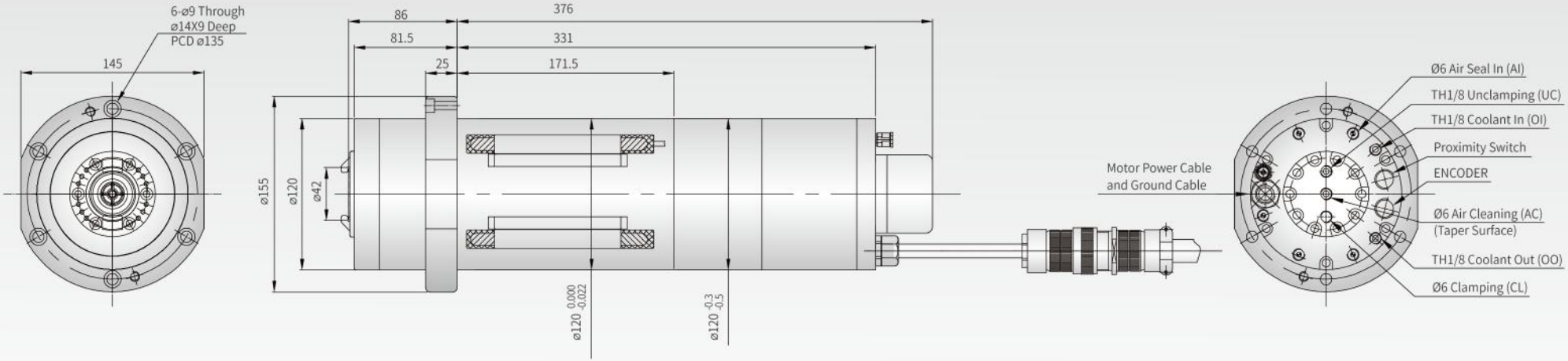


## RE4121

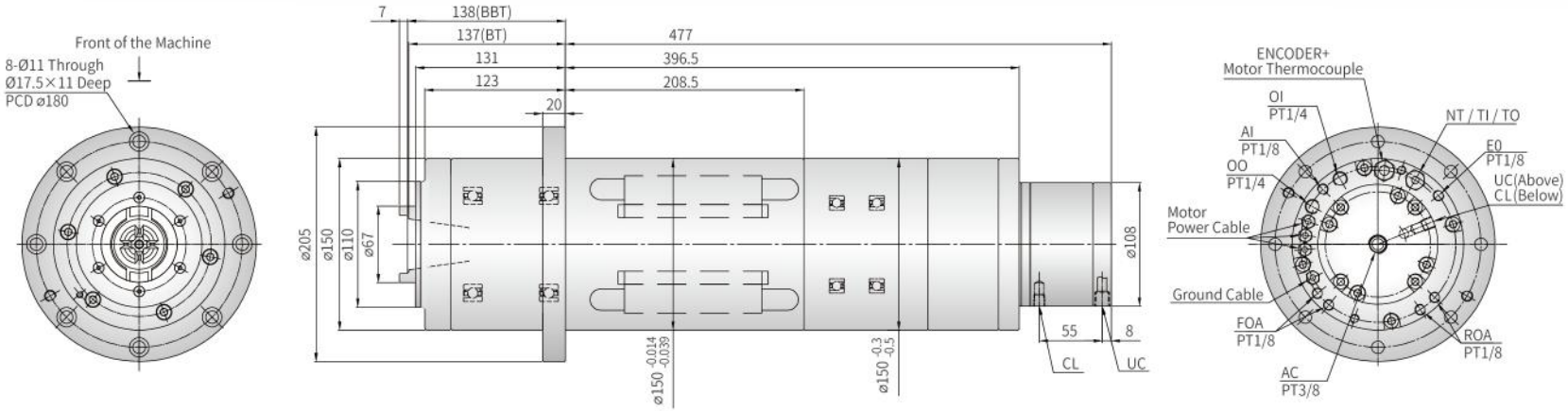


| CODE | DEFINITION |
|---|---|
| OI | Coolant In |
| OO | Coolant Out |
| FOA | Front Oil-Air In |
| ROA | Rear Oil-Air In |
| EO | Oil-Air Out |
| AI | Air Seal In |
| UC | Unclamping |
| CL | Clamping |
| AC | Air Cleaning |

【 Customized spindle specifications are available. Welcome to contact us for your spindle solutions. 】

# REH112

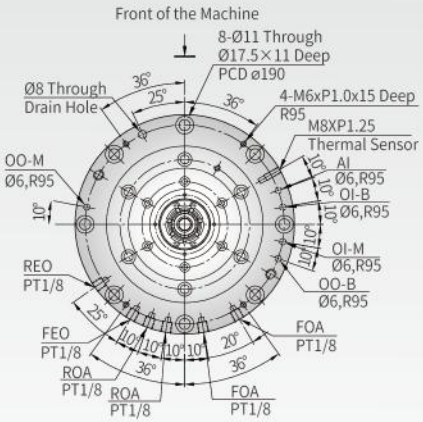


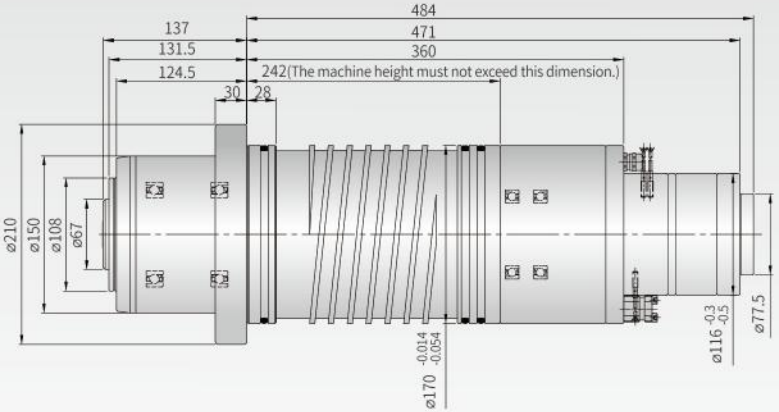


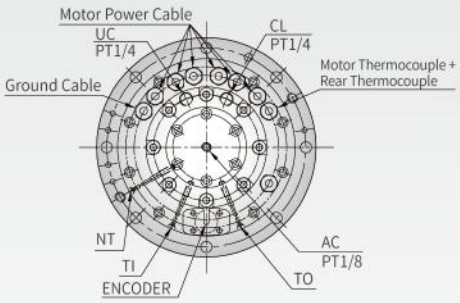


| CODE | DEFINITION |
|---|---|
| OI-B | Bearing Coolant In |
| OO-B | Bearing Coolant Out |
| OI-M | Motor Coolant In |
| OO-M | Motor Coolant Out |
| AI | Air Seal In |
| FOA | Front Oil-Air In |
| ROA | Rear Oil-Air In |
| FEO | Front Oil-Air Out |
| REO | Rear Oil-Air Out |
| CL | Clamping |
| UC | Unclamping |
| AC | Air Cleaning |
| TI | Clamping Sensor |
| TO | Unclamping Sensor |
| NT | No Tool Sensor |

# REH020

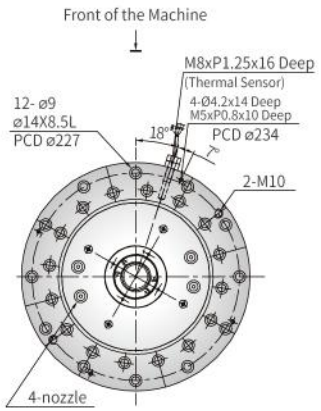


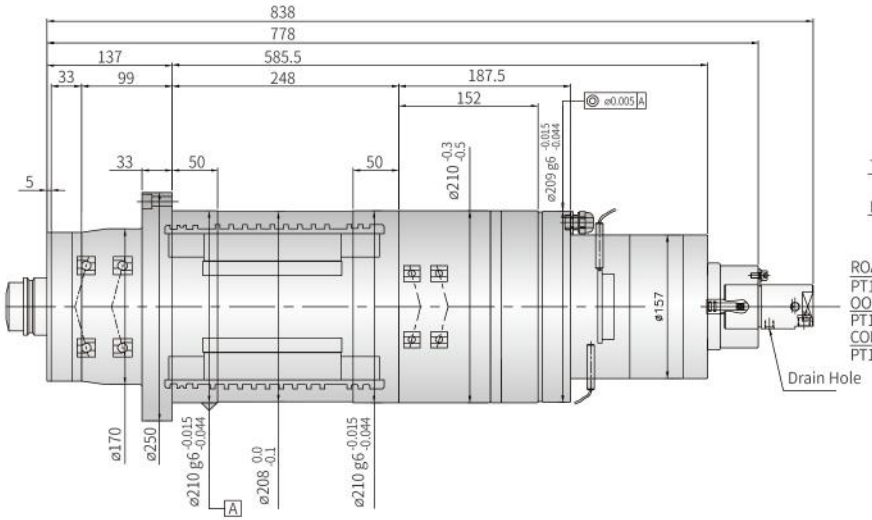


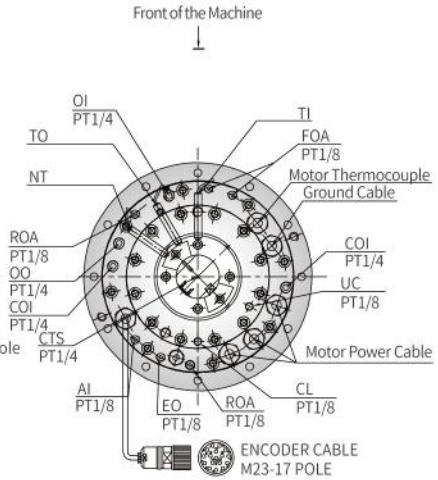


| CODE | DEFINITION |
|---|---|
| OI | Coolant In |
| OO | Coolant Out |
| AI | Air Seal In |
| FOA | Front Oil-Air In |
| ROA | Rear Oil-Air In |
| EO | Oil-Air Out |
| UC | Unclamping |
| CL | Clamping |
| COI | Cutting Coolant In |
| TI | Clamping Sensor |
| TO | Unclamping Sensor |
| NT | No Tool Sensor |
| CTS | Coolant Through Spindle |

## RE4114

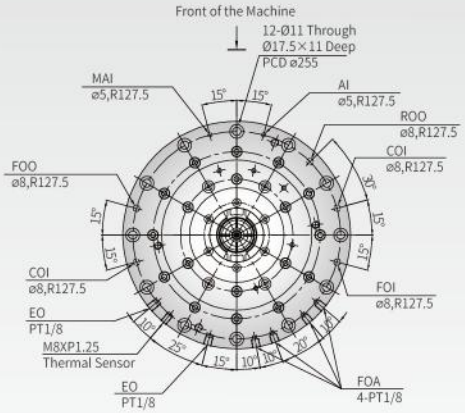


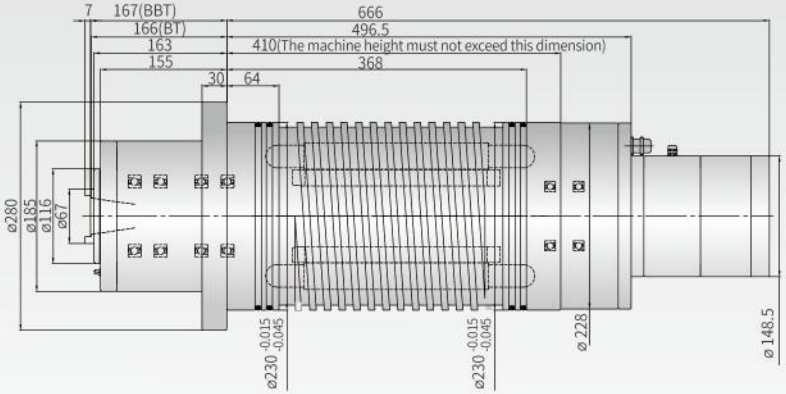


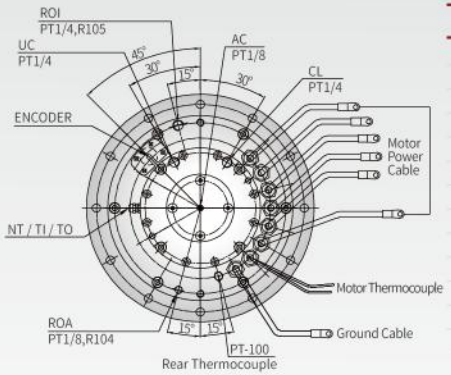


| CODE | DEFINITION |
|---|---|
| FOI | Front Coolant In |
| FOO | Front Coolant Out |
| ROI | Rear Coolant Out |
| ROO | Rear Coolant Out |
| COI | Cutting Coolant In |
| AI | Air Seal In |
| MAI | Motor Air Seal In |
| FOA | Front Oil-Air In |
| ROA | Rear Oil-Air In |
| EO | Oil-Air Out |
| UC | Unclamping |
| CL | Clamping |
| AC | Air Cleaning |

## RE5025

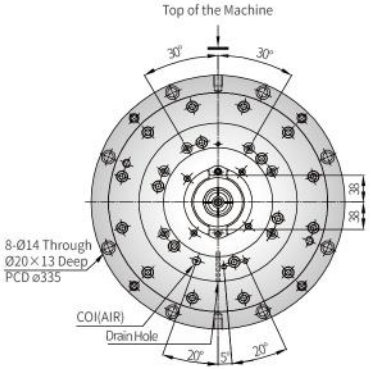


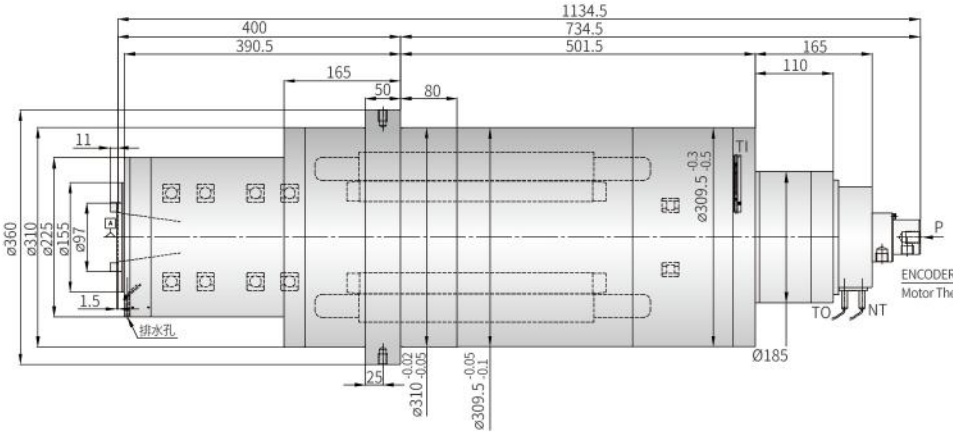


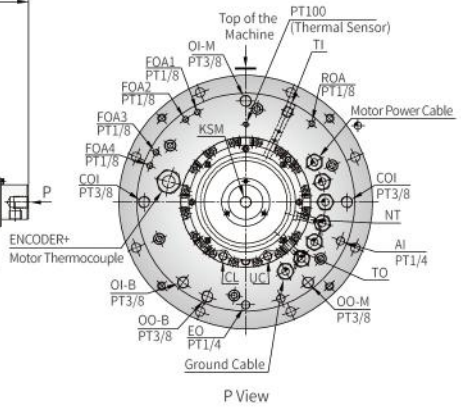


P View

| CODE | DEFINITION |
|---|---|
| UC | Unclamping |
| CL | Clamping |
| TO | Unclamping Sensor |
| TI | Clamping Sensor |
| NT | No Tool Sensor |
| AI | Air Seal In |
| EO | Oil-Air Out |
| FOA1~4 | Front Oil-Air In |
| ROA 1 | Rear Oil-Air In |
| OI-B | Bearing Coolant In |
| OO-B | Bearing Coolant Out |
| OI-M | Motor Coolant In |
| OO-M | Motor Coolant Out |
| COI1~2 | Cutting Coolant In |

# MILLING Direct-Drive Spindle

| Model | Housing OD (mm) | Max. Speed (rpm) | Taper | Clamping Force (kgf) | Bearing ID (mm) | Lubrication | Cooling | Weight (kg) | CTS |
|---|---|---|---|---|---|---|---|---|---|
| RD3068 | Ø100 | 24000 | BT30 | 250±50 | Ø40 | Grease Oil-Air | Oil | Approx.38 | Optional |
| RD3006 | Ø120 | 18000 | BT30 | 350±50 | Ø60 | Grease | | Approx.38 | |
| RD4172 | | 15000 | BT40/BBT40 | 900±100 | Ø60 | | | Approx.38 | |
| RDH085 | | 15000 | HSKA63 | 2050±250 | Ø60 | | | Approx.38 | |
| RD4152 | Ø150 | 18000 | BT40/BBT40 | 1200±100 | Ø70 | | | Approx.60 | |
| RDH060 | | 18000 | HSKA63 | 2050±250 | Ø70 | | | Approx.60 | |
| RD4014 | Ø155 | 15000 | BT40/BBT40 | 1000±100 | Ø70 | | | Approx.80 | |
| RDH025 | | 15000 | HSKA63 | 2050±250 | Ø70 | | | Approx.80 | |
| RD5012 | | 10000 | BT50/BBT50 | 1500±100 | Ø80 | | | Approx.70 | |
| RD5002 | Ø190 | 12000 | BT50/BBT50 | 1800±100 | Ø90 | | | Approx.112 | |
| RDH061 | | 12000 | HSKA100 | 5150±650 | Ø90 | | | Approx.112 | |
| RD5059 | Ø200 | 12000 | BT50/BBT50 | 1800±100 | Ø100 | Grease Oil-Air | | Approx.134 | |
| RDH008 | | 12000 | HSKA100 | 5150±650 | Ø100 | | | Approx.134 | |

## RD3006

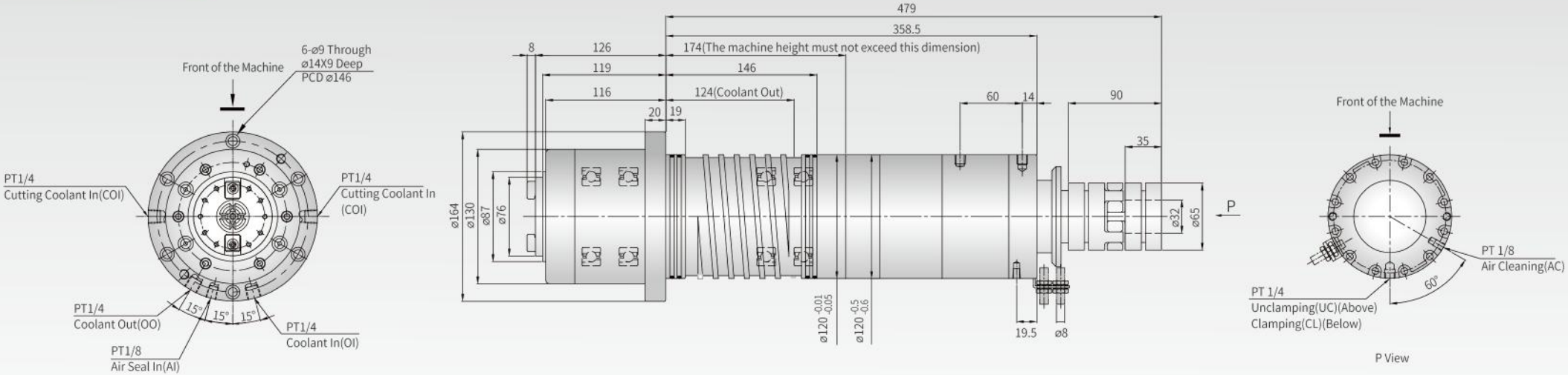


## RD4172

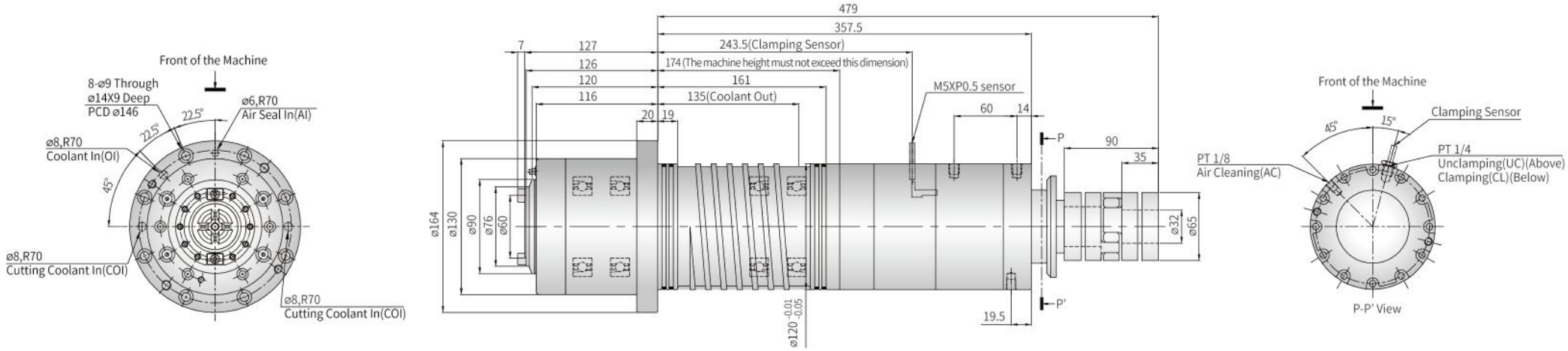

## RD4152

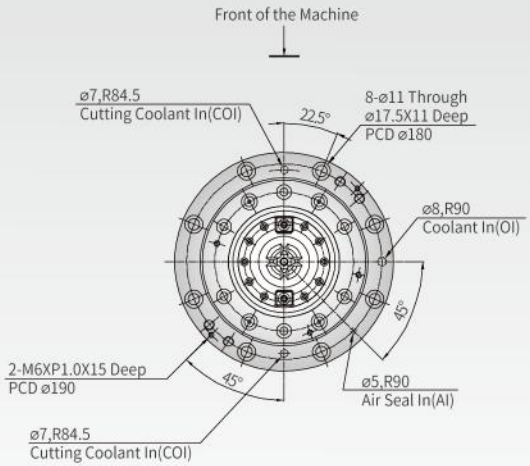


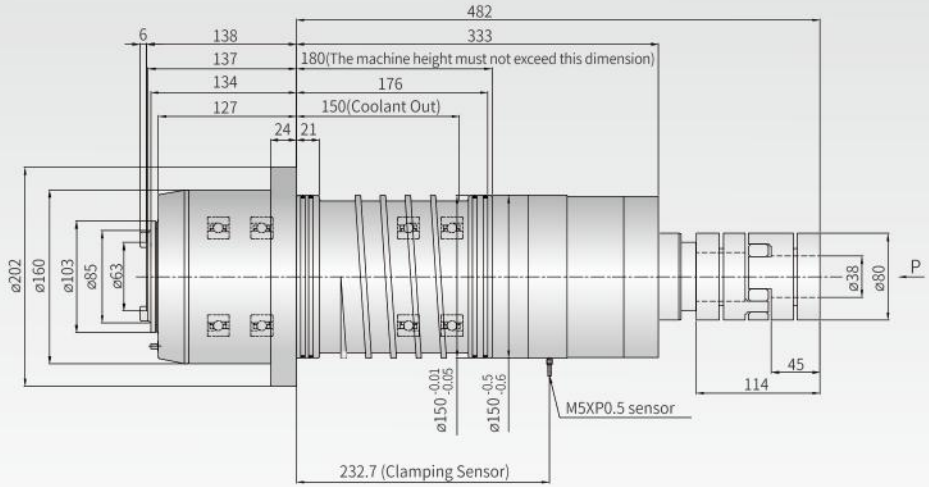


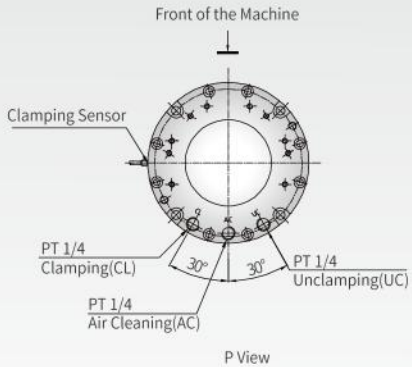


## RD5012

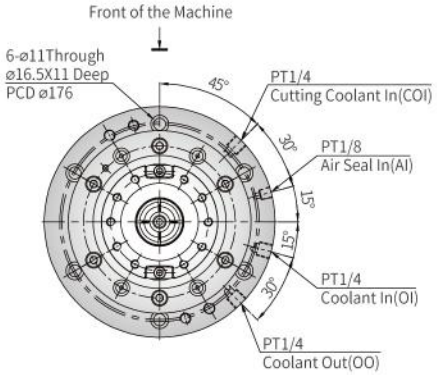


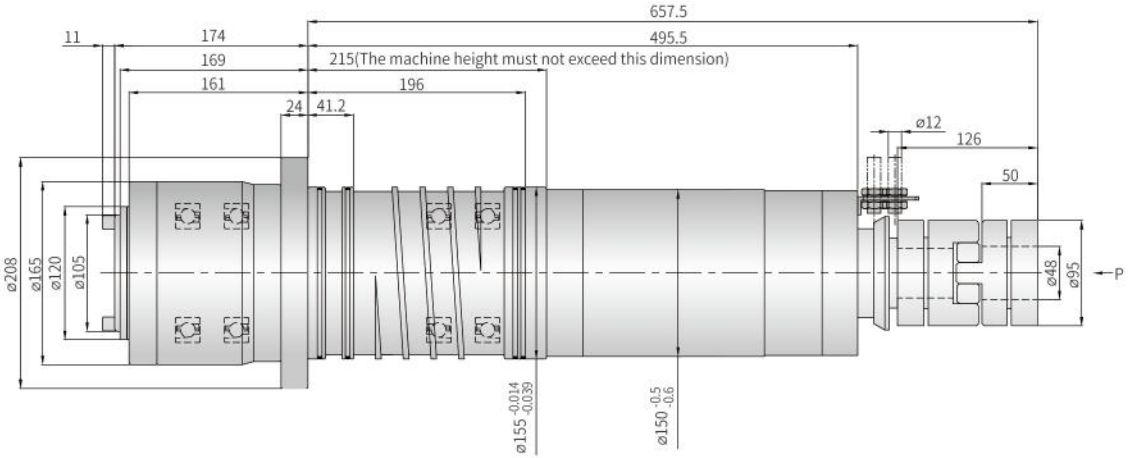


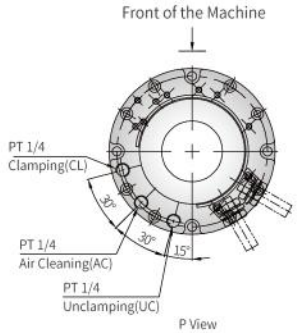

## RD5002

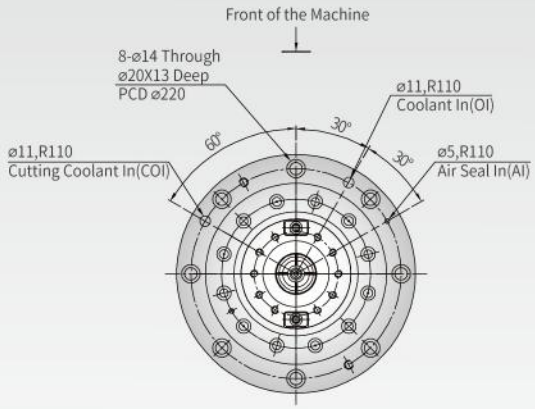


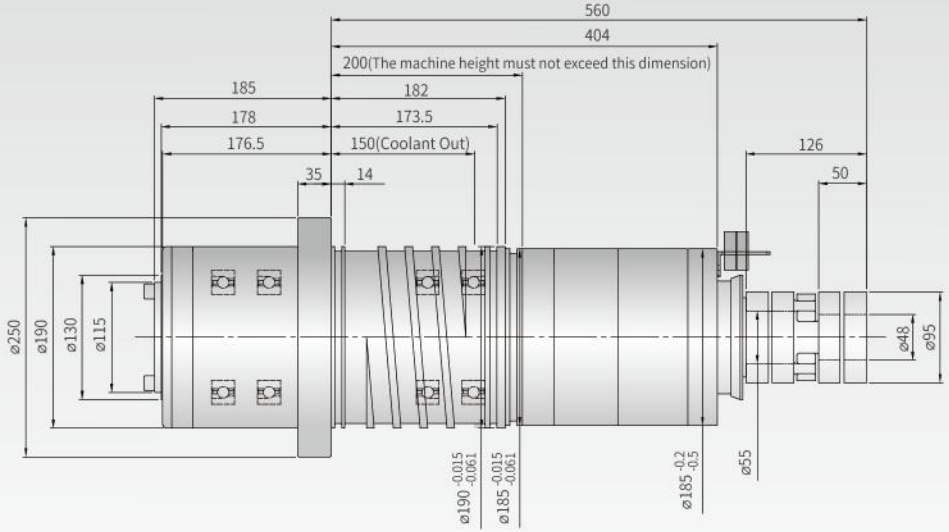


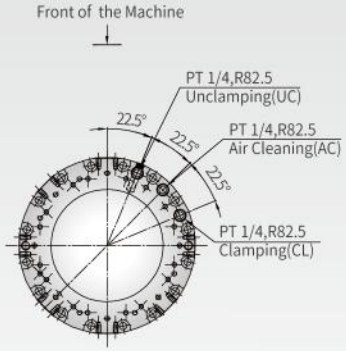


## RD5059

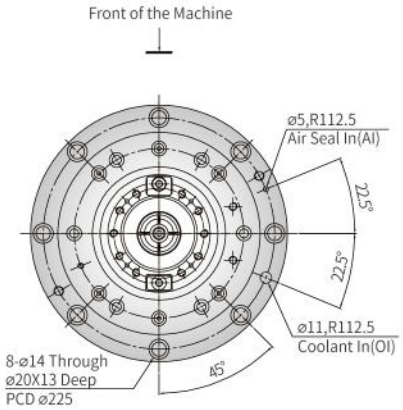


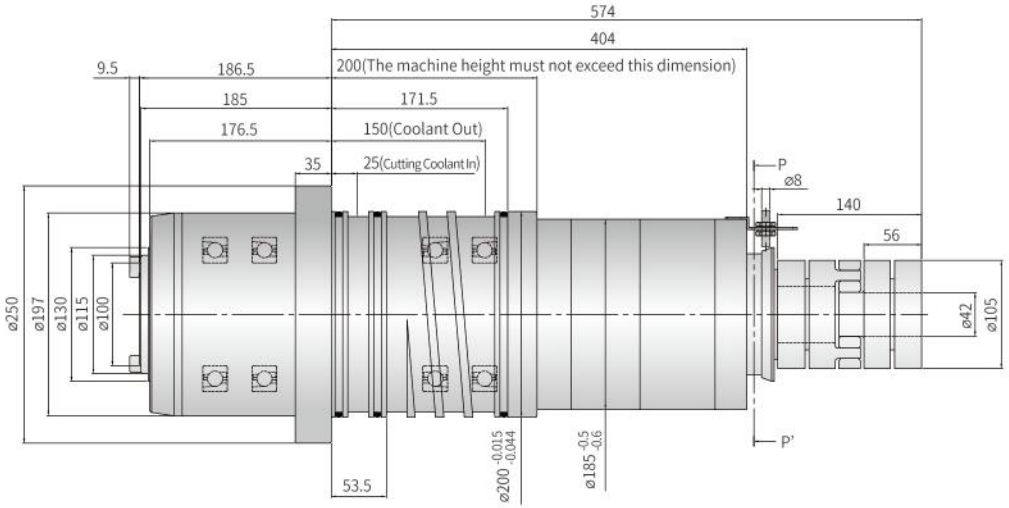


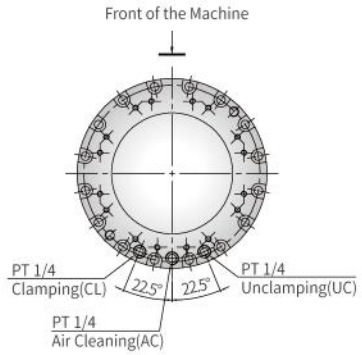


P-P' View

# MILLING Belt-Drive Spindle

| Model | Housing OD (mm) | Max. Speed (rpm) | Taper | Clamping Force (kgf) | Bearing ID (mm) | Lubrication | Cooling | Weight (kg) | CTS |
|---|---|---|---|---|---|---|---|---|---|
| RB3002 | Ø100 | 15000 | BT30 | 300±50 | Ø50 | Grease | Oil | Approx.17 | Optional |
| RB3021 | Ø120 | 15000 | BBT30 | 300±50 | Ø60 | | | Approx.20 | |
| RB4006 | | 12000 | BT40 | 700±50 | Ø60 | | | Approx.33 | |
| RB4002 | Ø150 | 12000 | BT40/BBT40 | 1000±100 | Ø70 | | | Approx.56 | |
| RBH004 | | 12000 | HSKA63 | 2050±250 | Ø70 | | | Approx.56 | |
| RB4078 | Ø155 | 12000 | BT40/BBT40 | 1000±100 | Ø70 | | | Approx.60 | |
| RBH018 | | 12000 | HSKA63 | 2050±250 | Ø70 | | | Approx.60 | |
| RB5002 | | 8000 | BT50/BBT50 | 1500±100 | Ø80 | | | Approx.70 | |
| RB5004 | Ø190 | 10000 | BT50/BBT50 | 1800±100 | Ø100 | | | Approx.123 | |
| RB5029 | Ø200 | 10000 | BT50/BBT50 | 1800±100 | Ø90 | | | Approx.130 | |

## RB3002

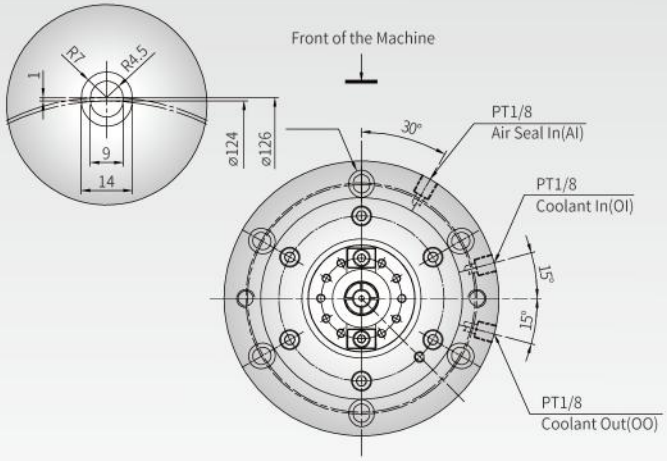


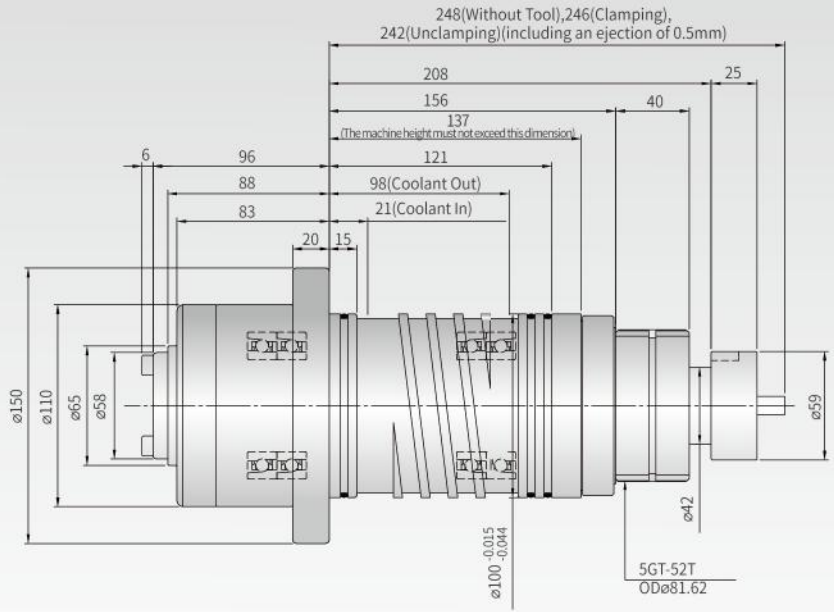


## RB4006

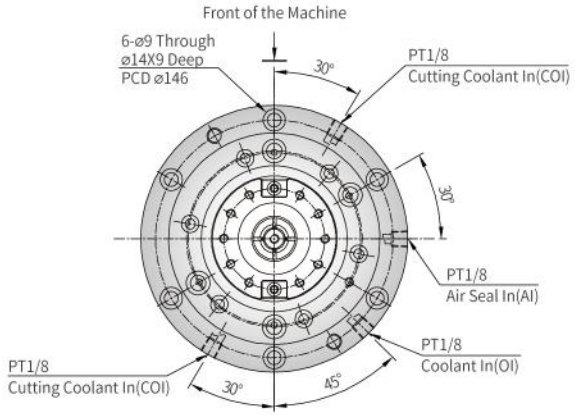


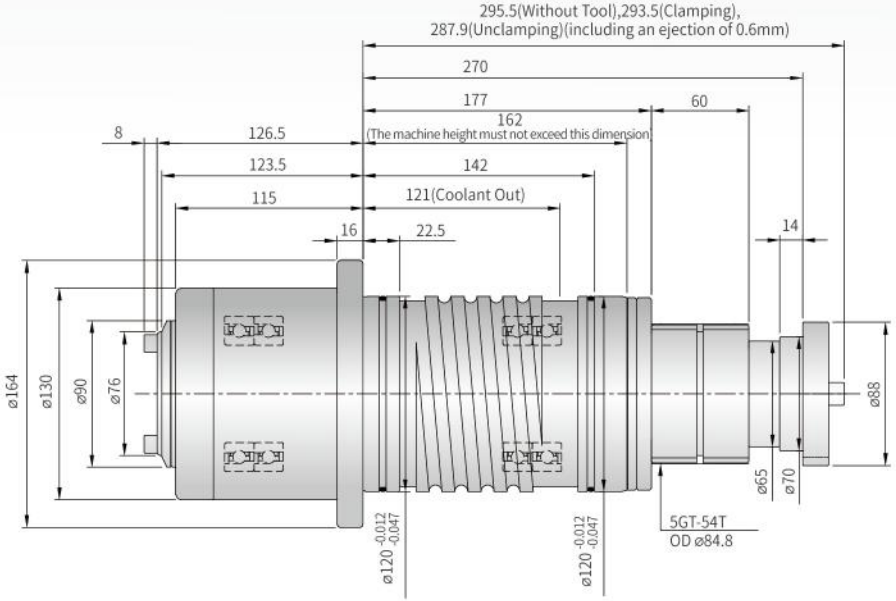

## RB4002

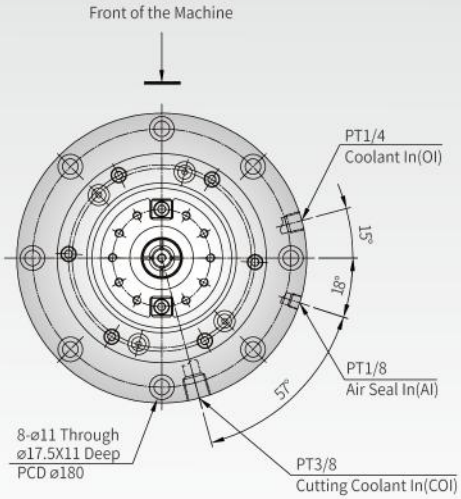


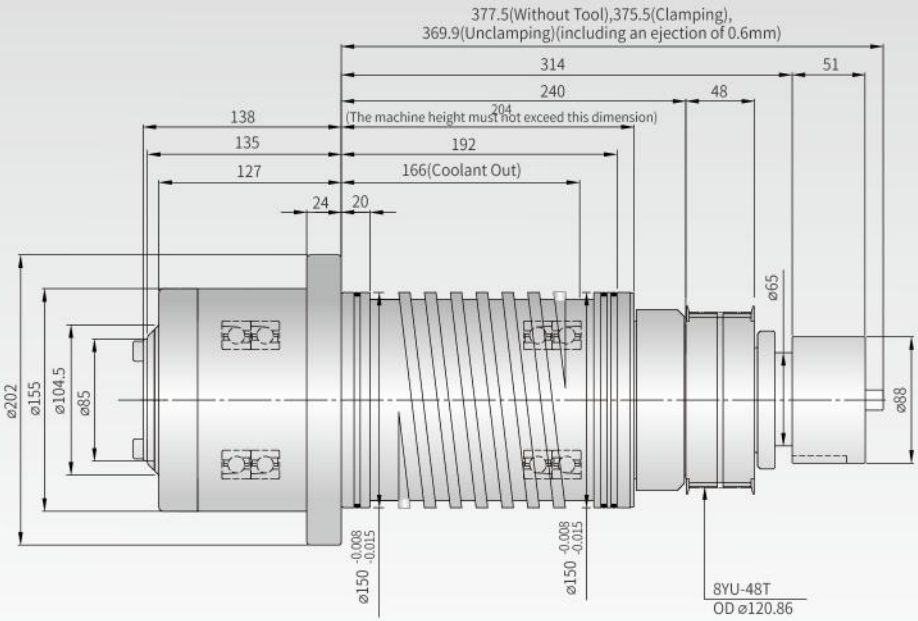


## RB4078

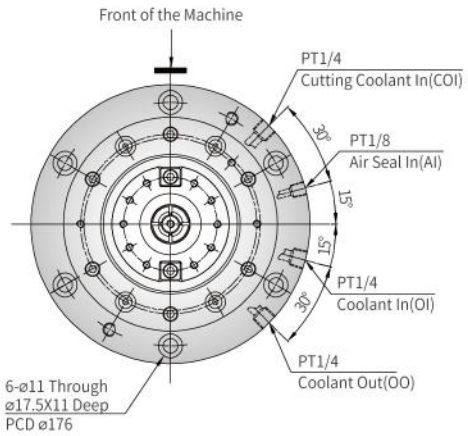


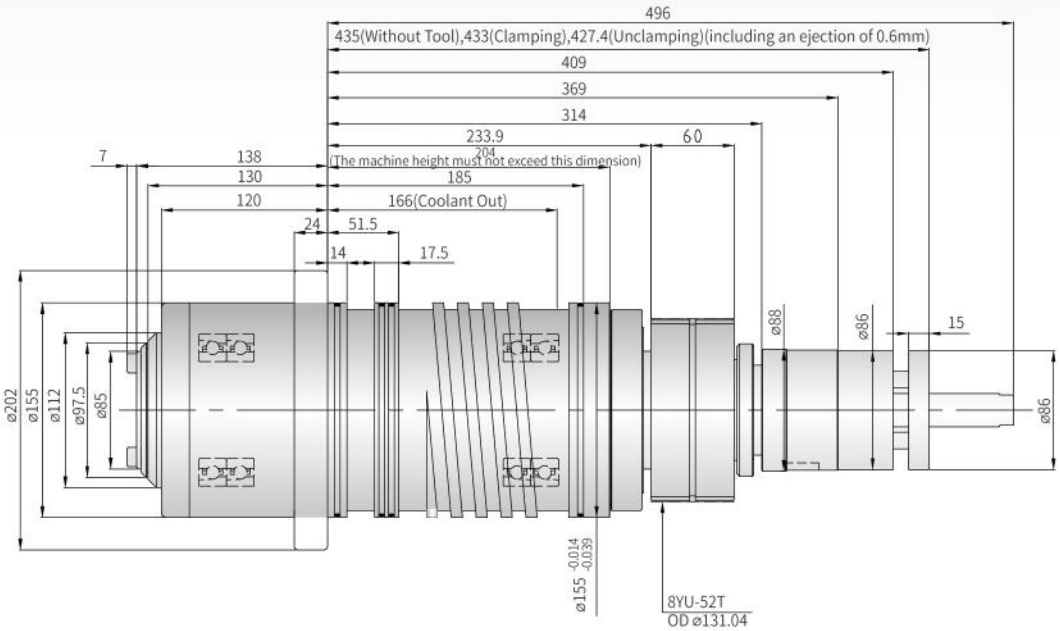

## RB5004

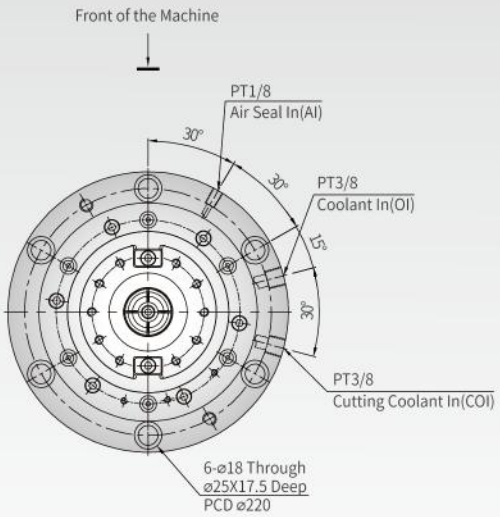


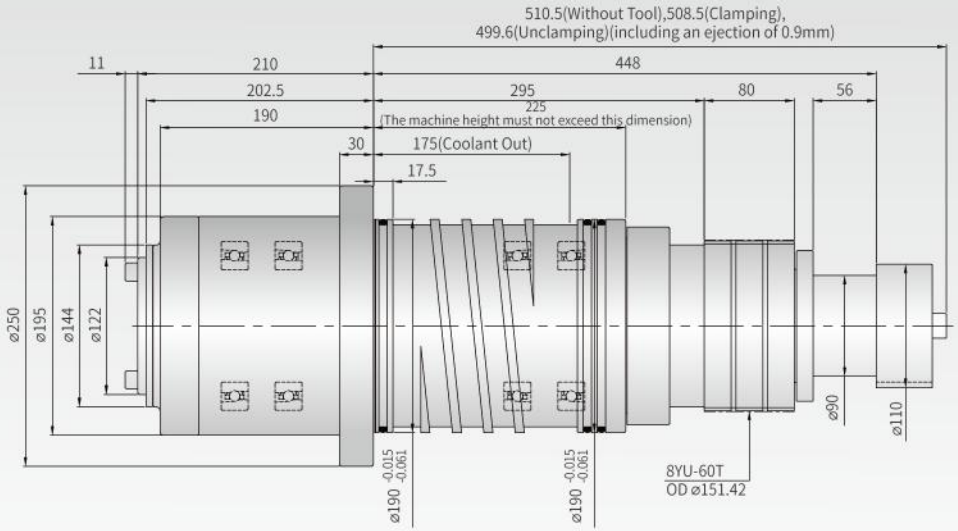


## RB5029

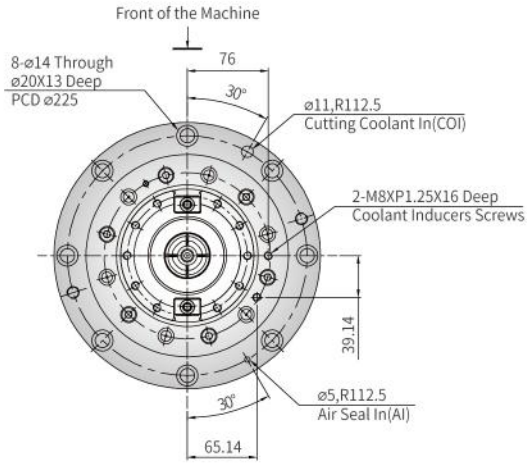


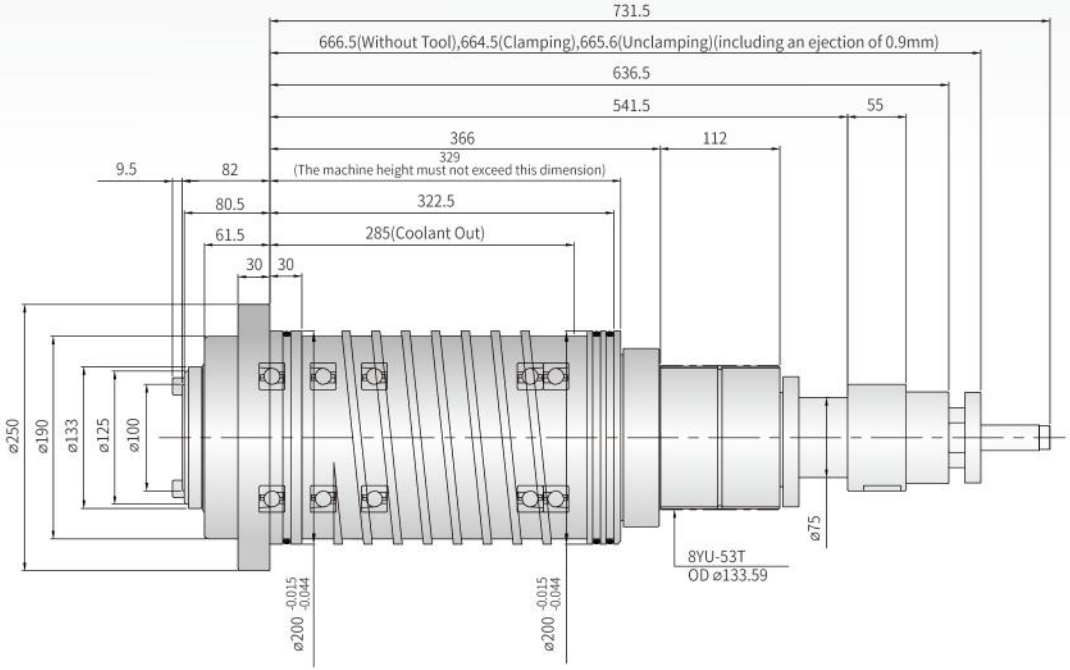

# MILLING Gear-Drive Spindle

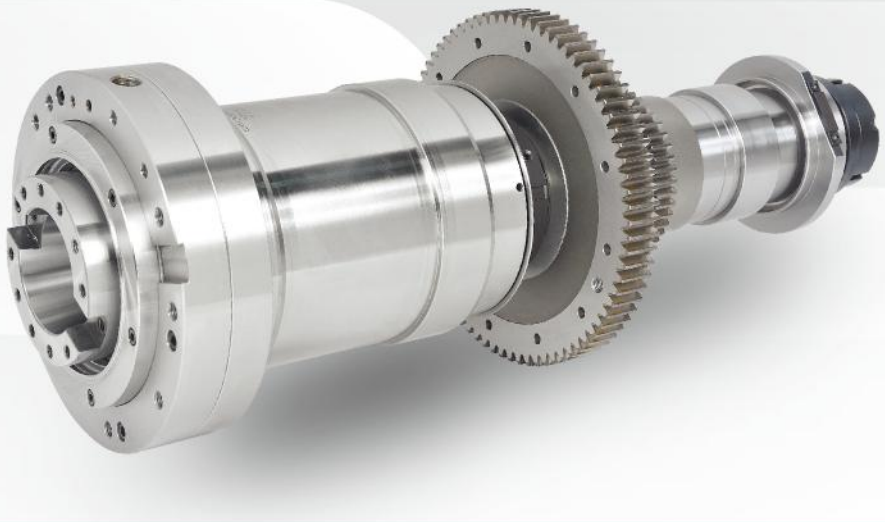

| Model | Housing OD (mm) | Max. Speed (rpm) | Taper | Clamping Force (kgf) | Bearing ID (mm) | Lubrication | Cooling | Weight (kg) | CTS |
|---|---|---|---|---|---|---|---|---|---|
| RT4002 | Ø150 | 8000 | BT40 | 1000±100 | Ø70 | Grease | Oil | Approx.65 | Optional |
| RT5006 | Ø190 | 8000 | BT50 | 1800±100 | Ø100 | | | Approx.110 | |

## RT4002

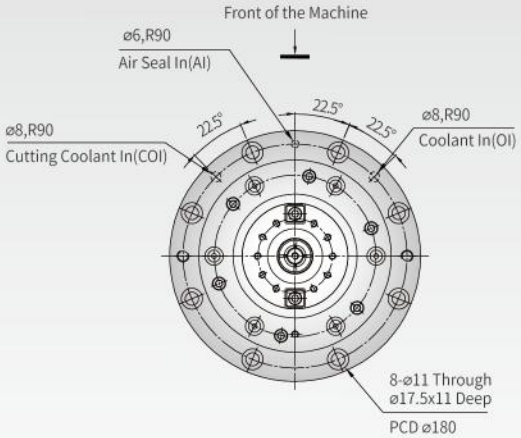


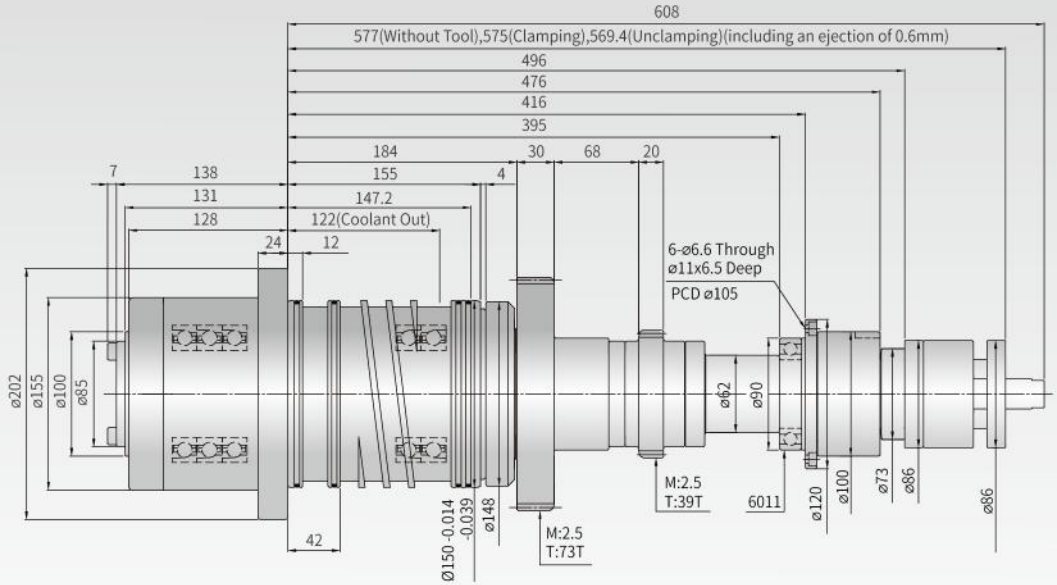


## RT5006

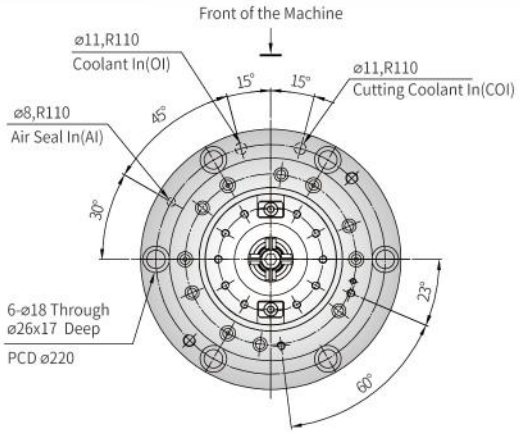


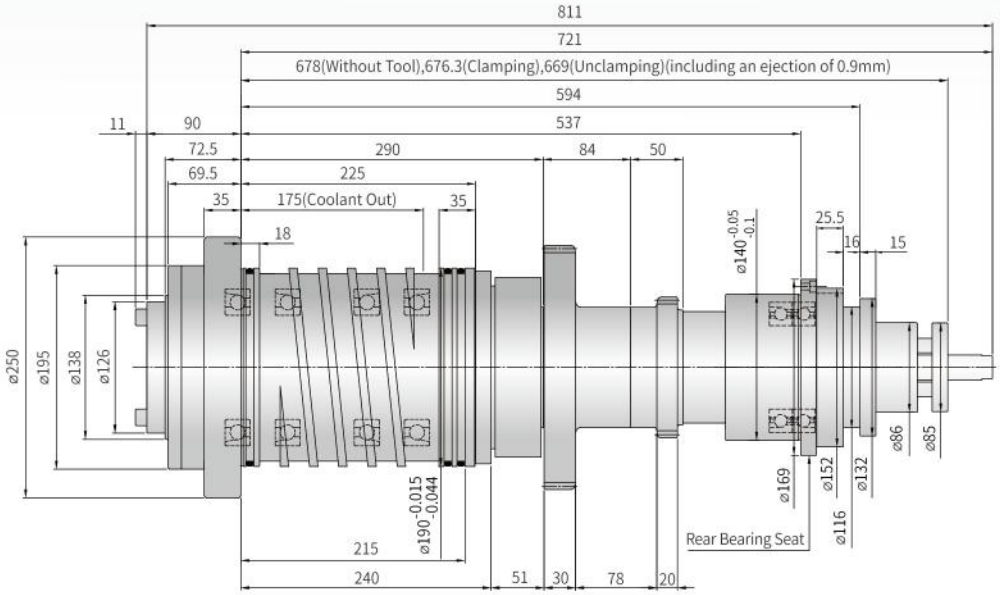

# TURNING Motorized Spindle

| Model | Housing OD (mm) | Max. Speed (rpm) | Nose | Spindle Bore Hole (mm) | Bearing ID (mm) | Lubrication | Motor Specification | Power S1 (kW) | Torque S1 (Nm) | Cooling | Weight (kg) | Options |
|---|---|---|---|---|---|---|---|---|---|---|---|---|
| REA506 | Ø185 | 6000 | A2-5 | 56.5 | Ø90+Ø75 | Grease | 160x110x220 | 11 | 74.9 | Oil | Approx. 250 | Brake Disc |
| REA813 | Ø340 | 4000 | A2-8 | 91 | Ø140+Ø115 | | ATE AC270/250/8 | 22 | 477.5 | | Approx. 360 | |

## REA506

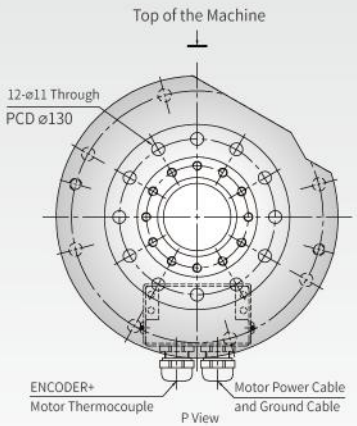


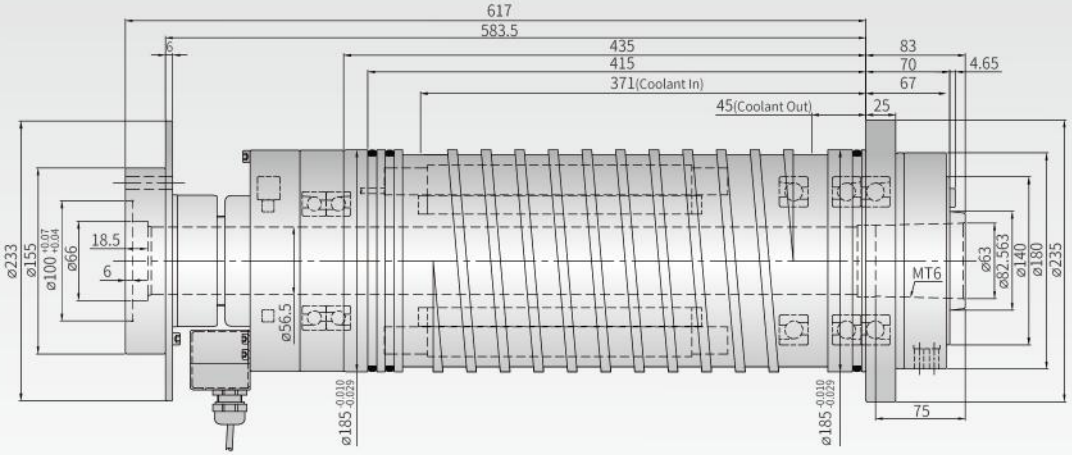


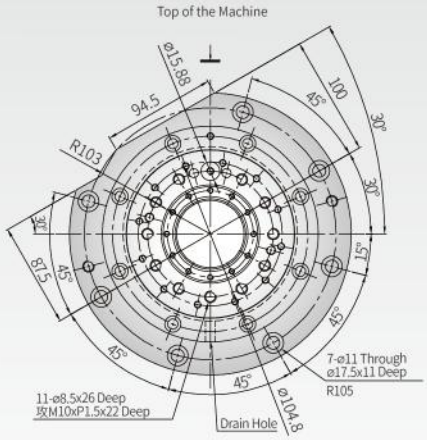


## REA813

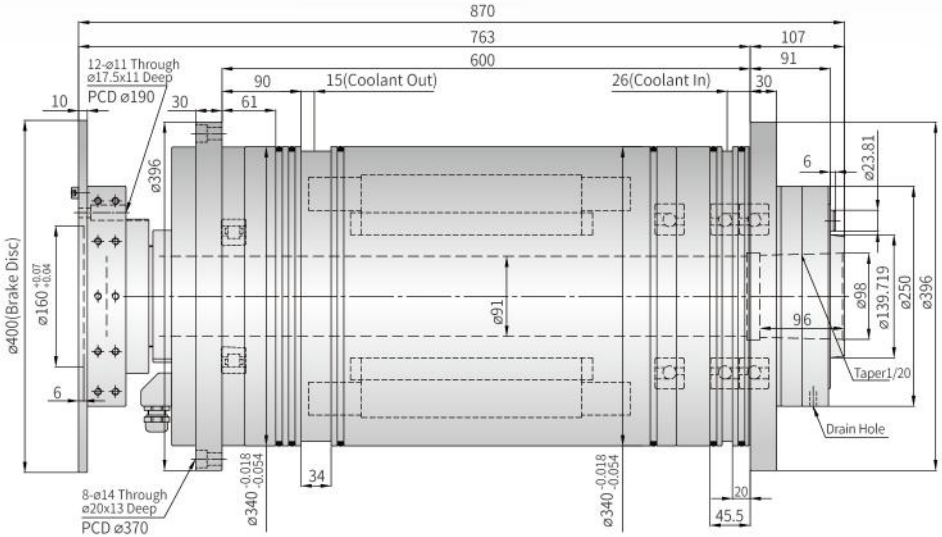


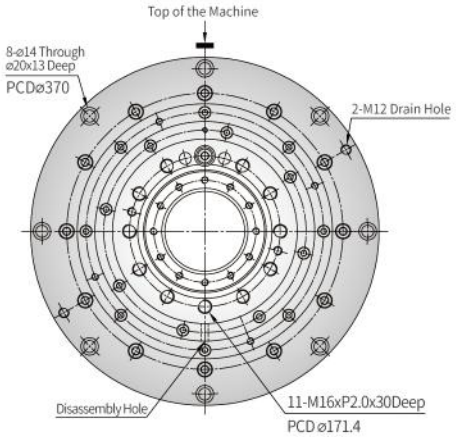

# TURNING Belt-Drive Spindle

| Model | Housing OD (mm) | Max. Speed (rpm) | Nose | Spindle Bore Hole (mm) | Bearing ID (mm) | Lubrication | Weight (kg) | Options |
|---|---|---|---|---|---|---|---|---|
| RA4007 | Ø150 | 8000 | A2-4 | 45 | Ø70 | Grease | Approx.47 | Brake Disc<br>Encoder |
| RA5005 | Ø170 | 6000 | A2-5 | 56 | Ø80 | | Approx.75 | |
| RA6023 | Ø200 | 5000 | A2-6 | 66 | Ø100+Ø90 | | Approx.90 | |
| RA8001 | Ø260 | 3500 | A2-8 | 92/98 | Ø130+Ø120 | | Approx.200 | |
| RA1113 | Ø286 | 2800 | A2-11 | 117.5 | Ø160+Ø150 | | Approx.313 | |
| RA1503 | Ø400 | 1000 | A2-15 | 184 | Ø240+Ø220 | | Approx.610 | |

## RA5005

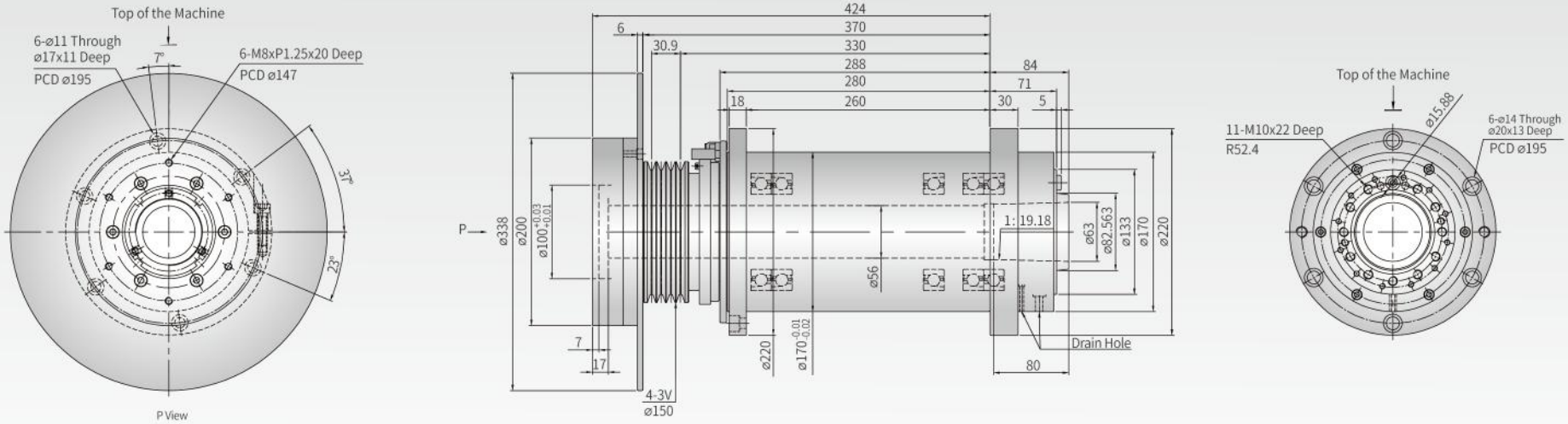


## RA6023

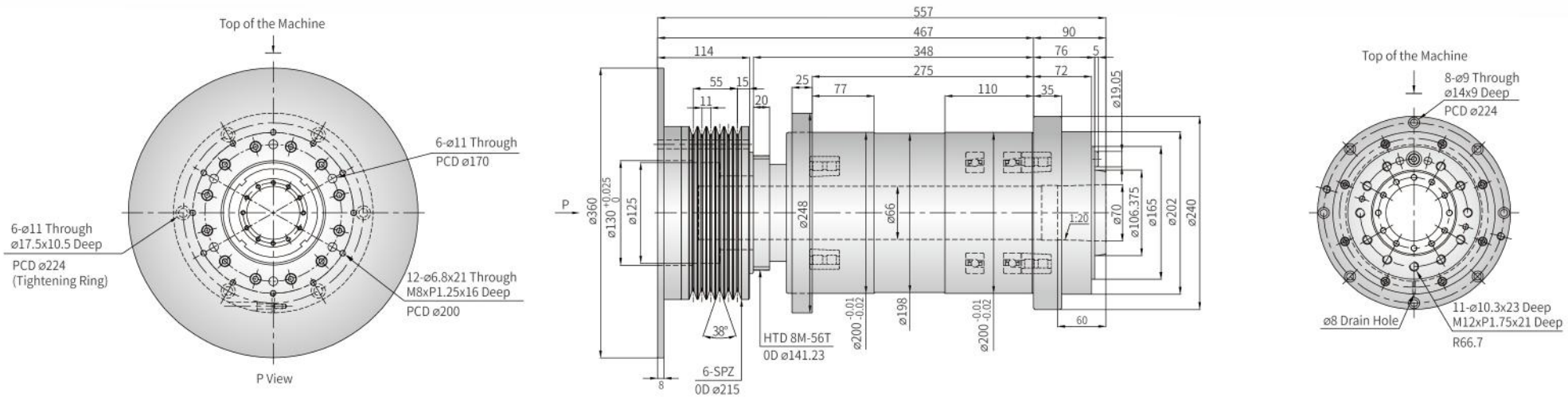


【 Customized spindle specifications are available. Welcome to contact us for your spindle solutions. 】

## RA8001

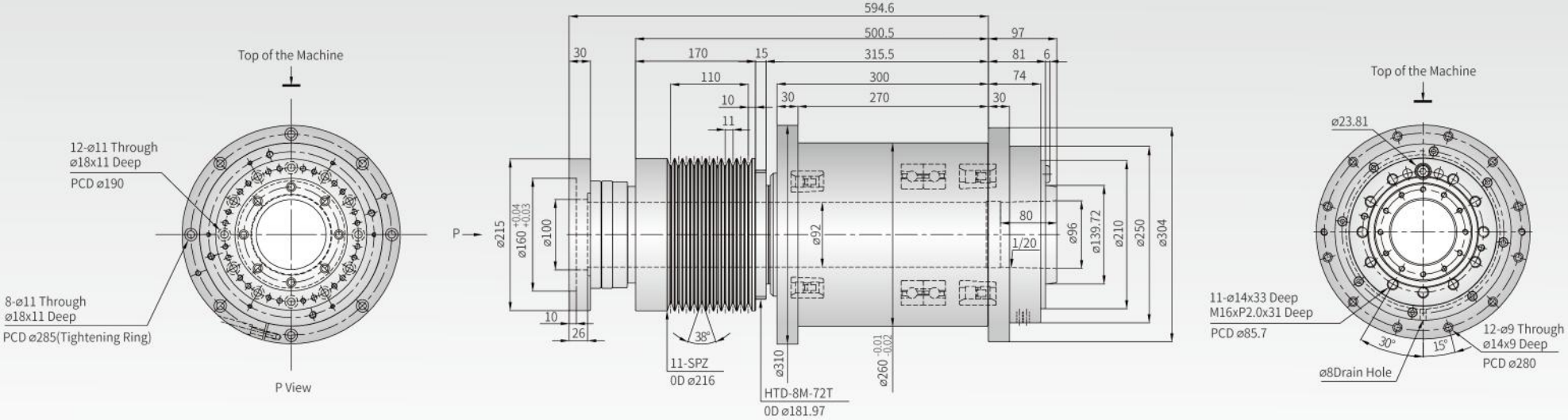


## RA1503

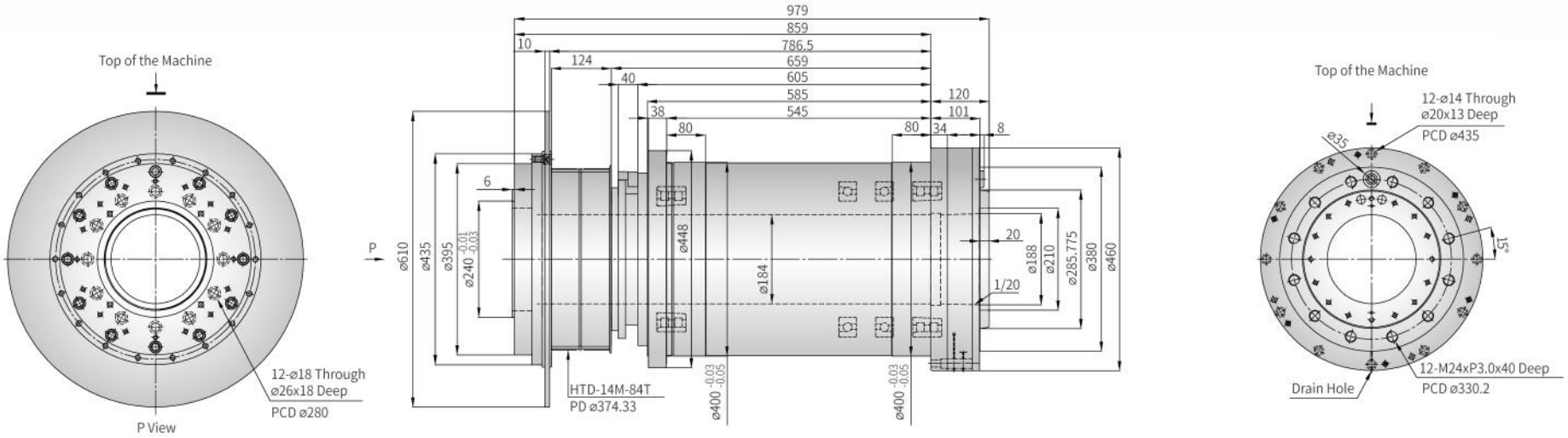

# Motorized Spindle

## MILL-TURN

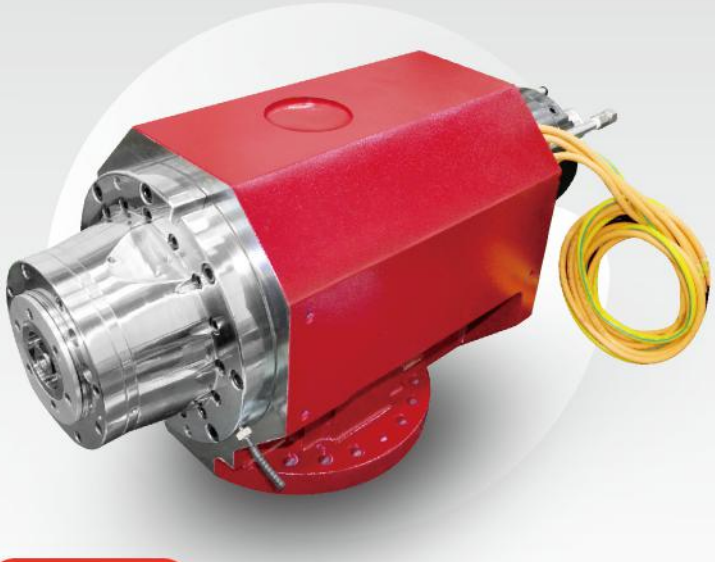

| Model | Housing OD (mm) | Max. Speed (rpm) | Taper | Clamping Force (kgf) | Bearing ID (mm) | Lubrica-tion | Motor Specification | Power S1 (kW) | Torque S1 (Nm) | Cooling | Weight (kg) | CTS |
|---|---|---|---|---|---|---|---|---|---|---|---|---|
| REH128 | Ø210 | 15000 | HSKA63 | 2000±250 | Ø70 | Grease | ATF IM160/170/6(380V) | 28.3 | 60.1 | Oil | Approx. 170 | Optional |
| REH098 | Ø235 | 15000 | HSKA63 | 2000±250 | Ø70 | | SIEMENS 1FE 1093-4WN11 | 28 | 75 | | Approx. 170 | |

## REH128

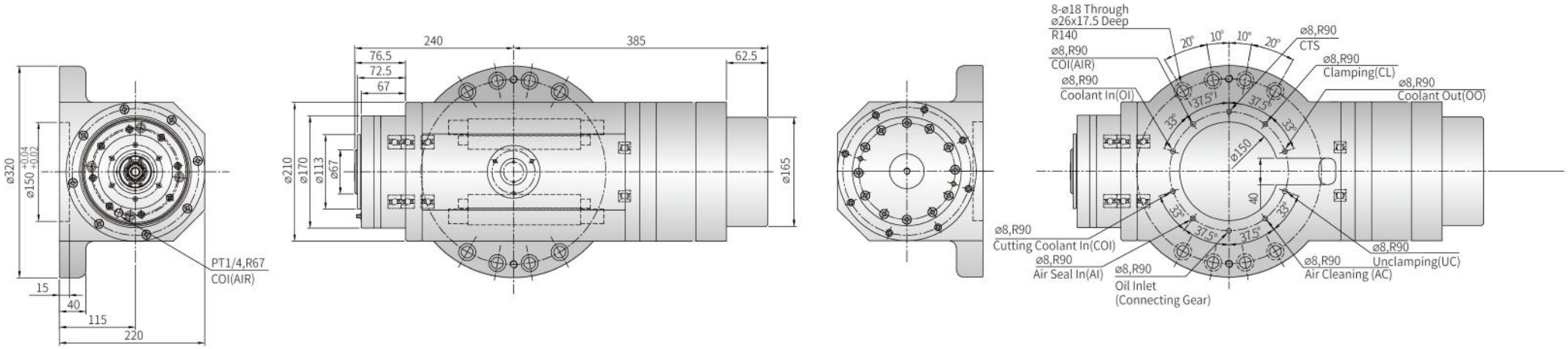


【 Customized spindle specifications are available. Welcome to contact us for your spindle solutions. 】

# MILL-TURN Direct-Drive Spindle

| Model | Housing OD (mm) | Max. Speed (rpm) | Taper | Clamping Force (kgf) | Bearing ID (mm) | Lubrication | Cooling | Weight (kg) | CTS |
|---|---|---|---|---|---|---|---|---|---|
| RD4187 | Ø150 | 12000 | BBT40 | 1260±60 | Ø70 | Grease | Oil | Approx. 58 | Op-tional |

## RD4187

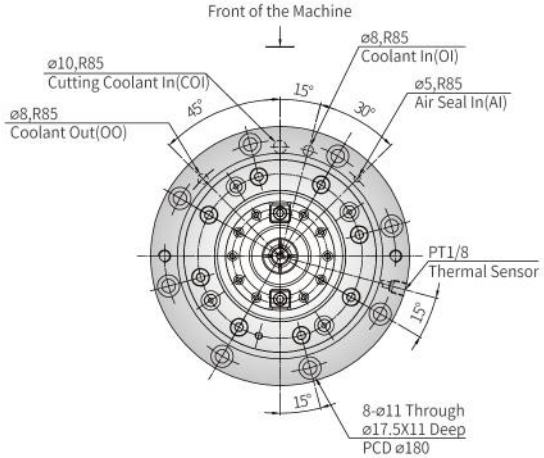


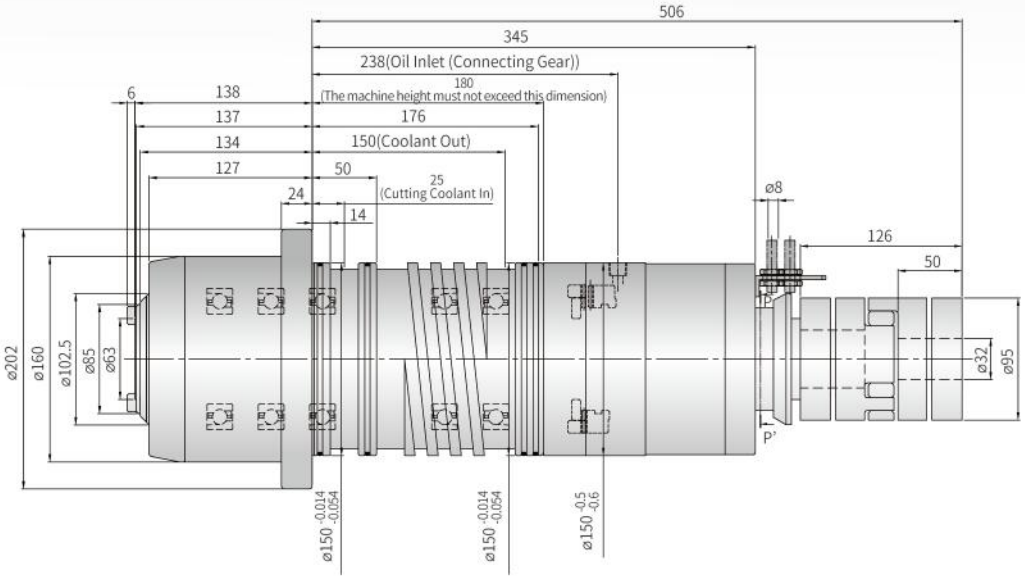


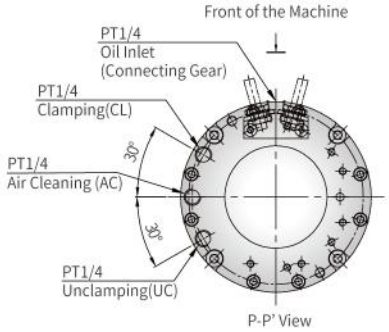

# Motorized Spindle

## MULTI-SPINDLE

| Model | Housing OD (mm) | Max. Speed (rpm) | Taper | Clamping Force (kgf) | Bearing ID (mm) | Lubrica-tion | Motor Specification | Power S1 (kW) | Torque S1 (Nm) | Cooling | Weight (kg) | CTS |
|---|---|---|---|---|---|---|---|---|---|---|---|---|
| RE4125 | Ø210 | 15000 | BBT40 | 1200±100 | Ø70 | Grease | ATE AC160/170/8(380V) | 15 | 71.6 | Oil | Approx. 152 | Optional |
| REH128 | | 15000 | HSKA63 | 2000±250 | Ø70 | | ATF IM160/170/6(380V) | 28.3 | 60.1 | | Approx. 170 | |
| REH098 | Ø235 | 15000 | HSKA63 | 2000±250 | Ø70 | | SIEMENS 1FE 1093-4WN11 | 28 | 75 | | Approx. 170 | |

## RE4125

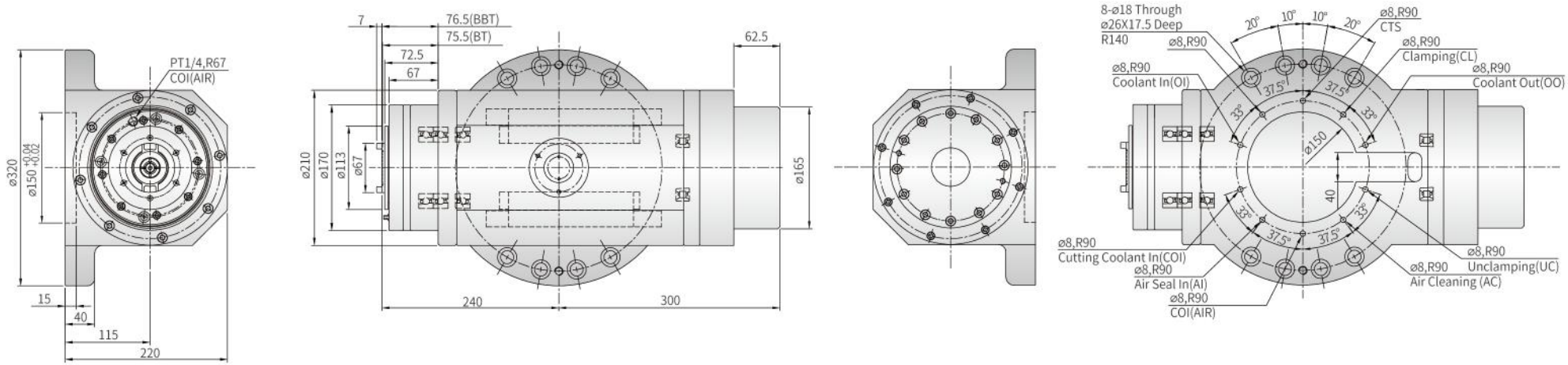


【 Customized spindle specifications are available. Welcome to contact us for your spindle solutions. 】

# TAPPING Direct-Drive Spindle

| Model | Housing OD (mm) | Max. Speed (rpm) | Taper | Clamping Force (kgf) | Bearing ID (mm) | Lubrication | Cooling | Weight (kg) | CTS |
|---|---|---|---|---|---|---|---|---|---|
| RD3018 | Ø100 | 24000 | BT30/BBT30 | 250±20 | Ø40 | Grease<br>Oil-Air | Oil | Approx. 16 | Optional |

## RD3018

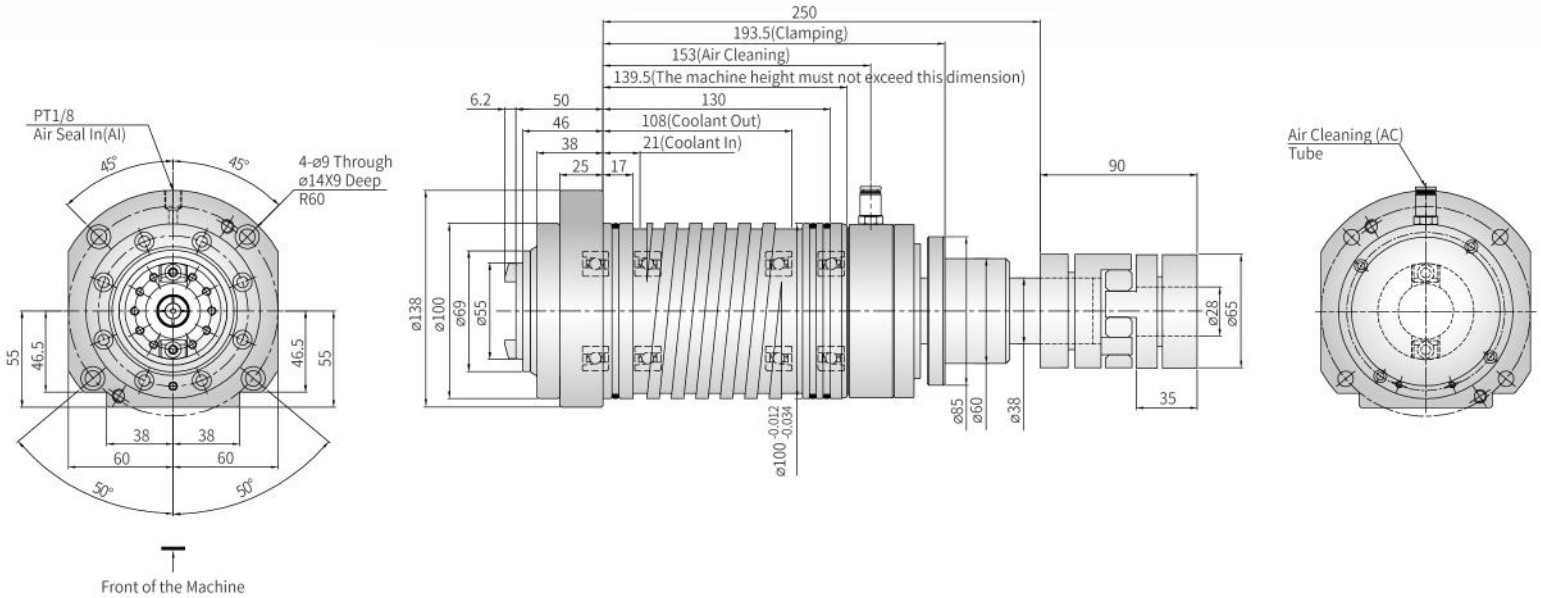

# Direct-Drive Spindle

GRINDING

| Model | Housing OD (mm) | Max. Speed (rpm) | Bearing ID (mm) | Lubrication | Weight (kg) |
|---|---|---|---|---|---|
| RG0024 | Ø130 | 3000 | Ø65 | Grease | Approx.80 |

## RG0024

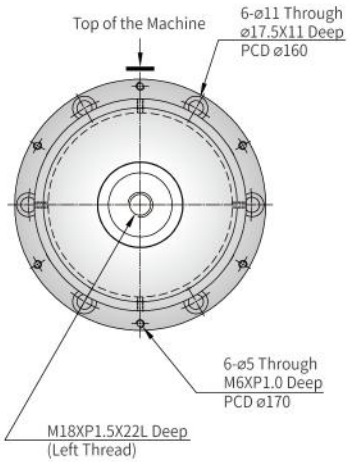


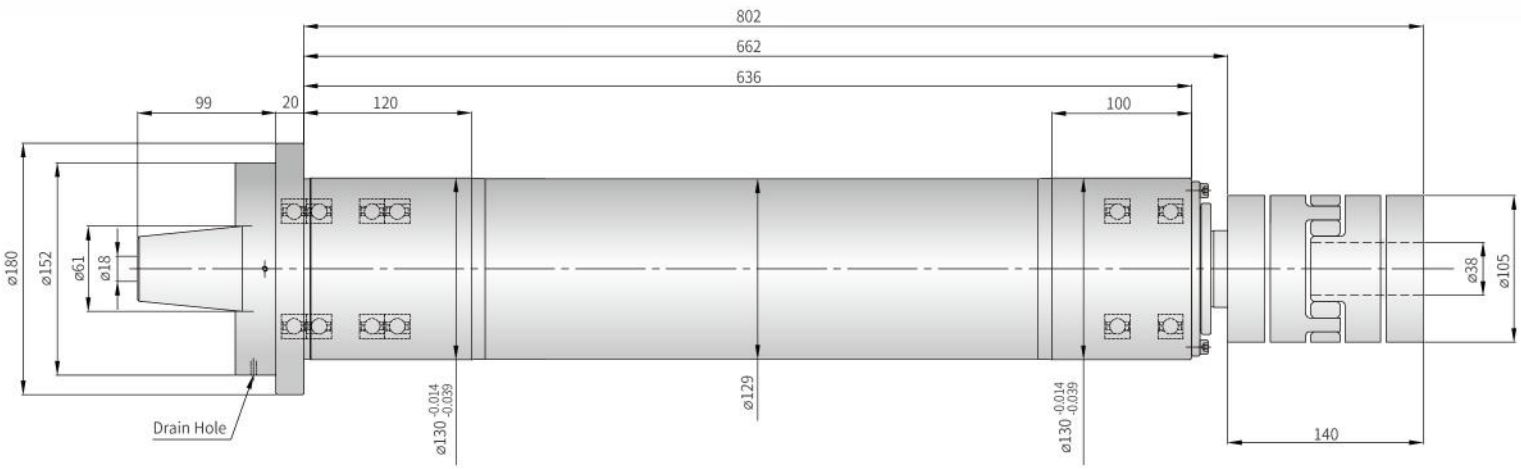


【 Customized spindle specifications are available. Welcome to contact us for your spindle solutions. 】

YOUR SPINDLE SOLUTIONS · SPEED · PRECISION · RIGIDITY

**ROYAL** Royal Precision Tools Corporation


## Headquarter / 1st Factory

No. 21, Sec.1, Zhongshan Rd., Wuri Dist.,
Taichung City 414001, Taiwan

886 4 2338 2068
886 4 2338 2161
royal_sa@royal-spindles.com.tw

## 2nd Factory

No. 10, Gongyequ 5th Rd., Xitun Dist.,
Taichung City 407020, Taiwan

886 4 2338 2068
886 4 2358 0309

## 3rd Factory

No. 66, Zhongji Rd., Jiji Township,
Nantou County 55243, Taiwan

886 4 2338 2068
886 49 276 2812